Name _____ Date _____

# Shapes and Perimeter

Unit Review (page 1 of 2)

**1.** Find the perimeter of the rectangle.

Perimeter = _____ m

**2.** Find the missing side of the rectangle.

**Perimeter = 24 cm**

_____ cm

**3.** Find the perimeter in units and the area in square units of each rectangle. Circle the rectangle with the greater perimeter.

A

Perimeter _____

Area _____

B

Perimeter _____

Area _____

**4.** Circle area or perimeter. Then solve.

Grass covers a yard **9** yards long and **6** yards wide. How much grass is there?

area perimeter

**Answer:** _____

**5.** Look at the quadrilateral. Write how many.

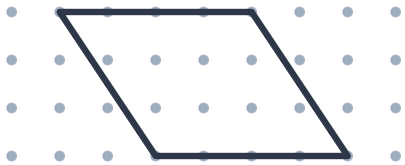

_____ right angles

_____ pairs of parallel sides


© 2026 Eggroll Games

Name _____ Date _____

# Shapes and Perimeter

Unit Review (page 2 of 2)

**6.** Circle every rectangle. Marks show equal sides and right angles.

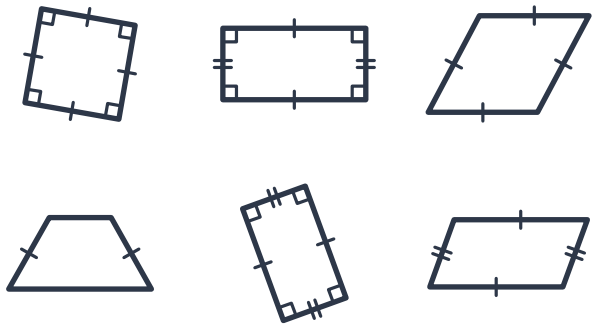

**7.** Draw a quadrilateral that is not a rhombus, a rectangle or a square.

Give it no right angles.

**8.** Each shape is made of **2** pieces. Write the name of the whole shape.

_____ _____

**9.** Circle the name of each figure.

line ray line segment

parallel perpendicular

acute right obtuse

**10.** Draw every line of symmetry. Write how many lines.

_____ _____ _____

**11.** How many unit cubes make the solid? Circle its name.

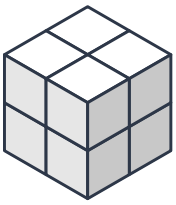

cube

rectangular prism

triangular prism

_____ unit cubes


© 2026 Eggroll Games

# Shapes and Perimeter

Unit Review (page 1 of 2)

**1.** Find the perimeter of the rectangle.

Perimeter = 28 m

Lesson 13.1 · Perimeter

**2.** Find the missing side of the rectangle.

**Perimeter = 24 cm**

4 cm

Lesson 13.2 · Find a missing side

**3.** Find the perimeter in units and the area in square units of each rectangle. Circle the rectangle with the greater perimeter.

A 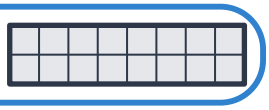

Perimeter 20

Area 16

B

Perimeter 16

Area 16

Lesson 13.3 · Same perimeter, other area

**4.** Circle area or perimeter. Then solve.

Grass covers a yard 9 yards long and 6 yards wide. How much grass is there?

area perimeter

**Answer:** 54 square yards

Lesson 13.4 · Area or perimeter?

**5.** Look at the quadrilateral. Write how many.

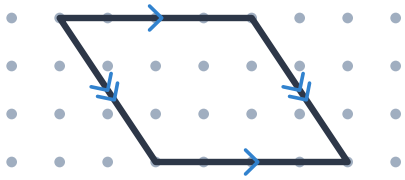

0 right angles

2 pairs of parallel sides

Lesson 13.5 · Quadrilateral attributes


© 2026 Eggroll Games

# Shapes and Perimeter

Unit Review (page 2 of 2)

**6.** Circle every rectangle. Marks show equal sides and right angles.

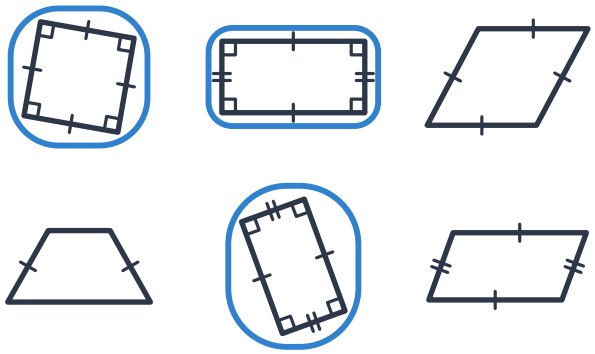

Lesson 13.6 · Rhombus, rectangle, square

**7.** Draw a quadrilateral that is not a rhombus, a rectangle or a square.

Give it no right angles.

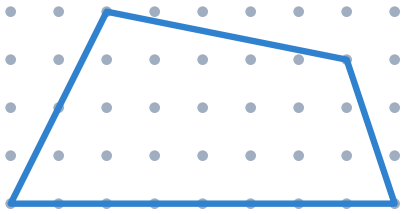

One way

Lesson 13.7 · Draw quadrilaterals

**8.** Each shape is made of **2** pieces. Write the name of the whole shape.

pentagon

hexagon

Lesson 13.8 · Polygons

**9.** Circle the name of each figure.

line ray line segment

parallel perpendicular

acute right obtuse

Lesson 13.9 · Lines, rays and angles

**10.** Draw every line of symmetry. Write how many lines.

4

1

0

Lesson 13.10 · Lines of symmetry

**11.** How many unit cubes make the solid? Circle its name.

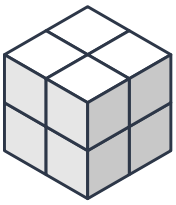

cube

rectangular prism

triangular prism

8 unit cubes

Lesson 13.11 · Solids and unit cubes


© 2026 Eggroll Games