Name _____ Date _____

Shapes and Perimeter

Unit Test, Form A (page 1 of 2)

Score _____ **/ 11**

1. Find the perimeter.

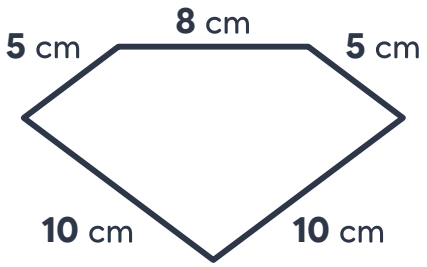

Perimeter = _____ cm

2. Find the missing side.

Perimeter = 28 m

_____ m

3. Find the perimeter in units and the area in square units of each rectangle. Circle the rectangle with the greater area.

A

Perimeter _____

Area _____

B

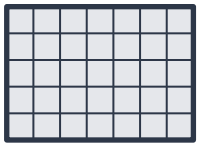

Perimeter _____

Area _____

4. Circle area or perimeter. Then solve.

A rope goes around a pool **12** meters long and **5** meters wide. How long is the rope?

area perimeter

Answer: _____

5. Look at the quadrilateral. Write how many.

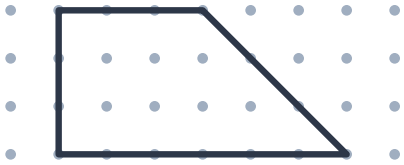

_____ right angles

_____ pairs of parallel sides

© 2026 Eggroll Games

Name _____ Date _____

Shapes and Perimeter

Unit Test, Form A (page 2 of 2)

6. Circle every rhombus. Marks show equal sides and right angles.

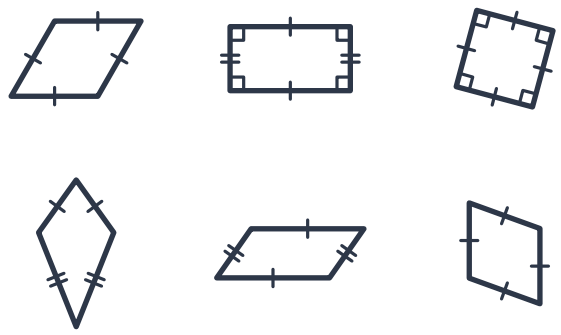

7. Draw a quadrilateral that is not a rhombus, a rectangle or a square.

Give it exactly **2** right angles.

8. Write the name of each polygon.

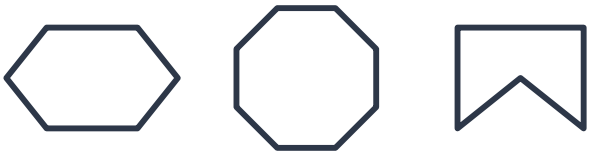

_____ _____ _____

9. Circle the name of each figure.

line ray line segment

parallel perpendicular

acute right obtuse

10. Draw every line of symmetry. Write how many lines.

_____ _____ _____

11. How many unit cubes make the solid? Circle its name.

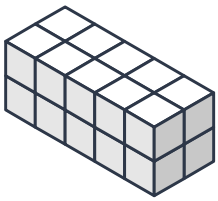

cube

rectangular prism

triangular prism

_____ unit cubes

© 2026 Eggroll Games

Name _____ Date _____

Shapes and Perimeter

Unit Test, Form B (page 1 of 2)

Score _____ **/ 11**

1. Find the perimeter.

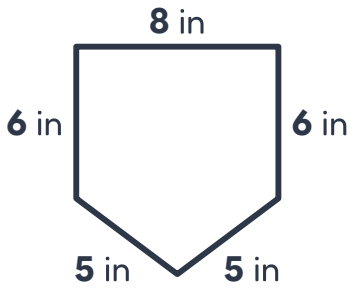

Perimeter = _____ in

2. Find the missing side.

Perimeter = 30 ft

3. Find the perimeter in units and the area in square units of each rectangle. Circle the rectangle with the greater area.

A

Perimeter _____

Area _____

B

Perimeter _____

Area _____

4. Circle area or perimeter. Then solve.

Carpet covers a floor **6** feet long and **4** feet wide. How much carpet is there?

area perimeter

Answer: _____

5. Look at the quadrilateral. Write how many.

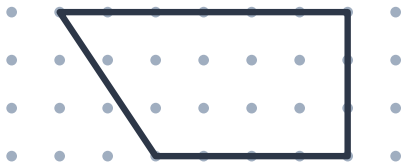

_____ right angles

_____ pairs of parallel sides

© 2026 Eggroll Games

Name _____ Date _____

Shapes and Perimeter

Unit Test, Form B (page 2 of 2)

6. Circle every rhombus. Marks show equal sides and right angles.

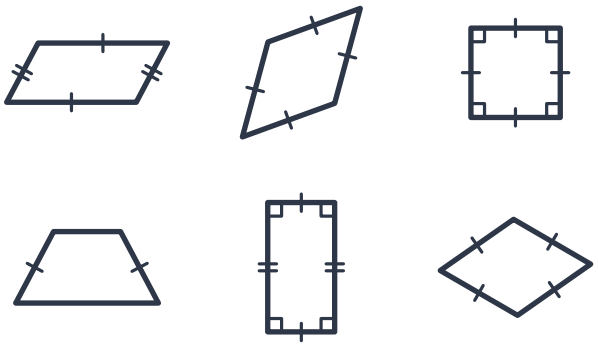

7. Draw a quadrilateral that is not a rhombus, a rectangle or a square.

Give it **4** sides of different lengths.

8. Write the name of each polygon.

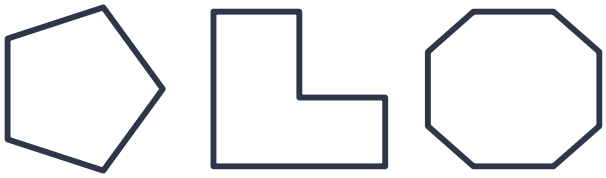

_____ _____ _____

9. Circle the name of each figure.

line ray line segment

parallel perpendicular

acute right obtuse

10. Draw every line of symmetry. Write how many lines.

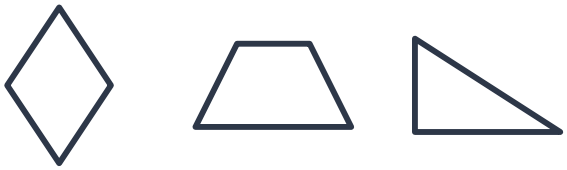

_____ _____ _____

11. How many unit cubes make the solid? Circle its name.

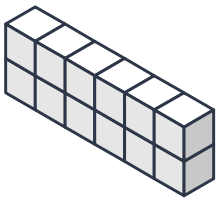

cube

rectangular prism

triangular prism

_____ unit cubes

© 2026 Eggroll Games

Shapes and Perimeter

Unit Test, Form A (page 1 of 2)

Score _____ / 11

1. Find the perimeter.

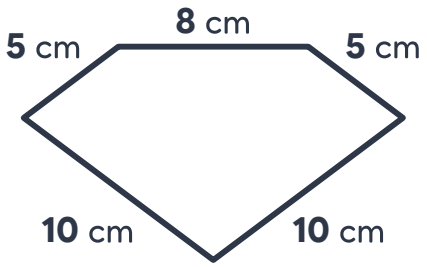

Perimeter = 38 cm

Lesson 13.1 · Perimeter

2. Find the missing side.

Perimeter = 28 m

8 m

Lesson 13.2 · Find a missing side

3. Find the perimeter in units and the area in square units of each rectangle. Circle the rectangle with the greater area.

A

Perimeter 24

Area 27

B 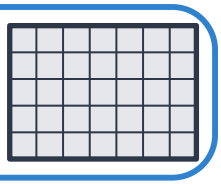

Perimeter 24

Area 35

Lesson 13.3 · Same perimeter, other area

4. Circle area or perimeter. Then solve.

A rope goes around a pool **12** meters long and **5** meters wide. How long is the rope?

area perimeter

Answer: 34 meters

Lesson 13.4 · Area or perimeter?

5. Look at the quadrilateral. Write how many.

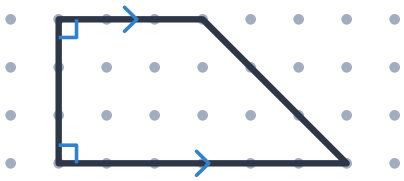

2 right angles

1 pairs of parallel sides

Lesson 13.5 · Quadrilateral attributes

© 2026 Eggroll Games

Shapes and Perimeter

Unit Test, Form A (page 2 of 2)

6. Circle every rhombus. Marks show equal sides and right angles.

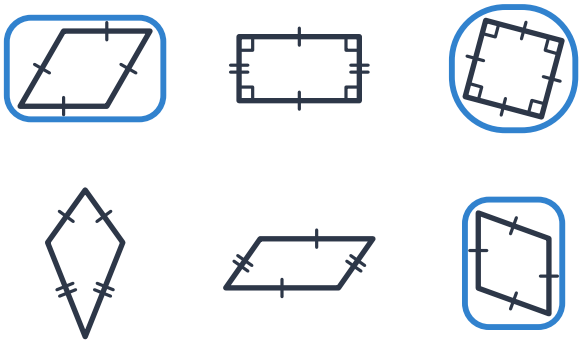

Lesson 13.6 · Rhombus, rectangle, square

7. Draw a quadrilateral that is not a rhombus, a rectangle or a square.

Give it exactly **2** right angles.

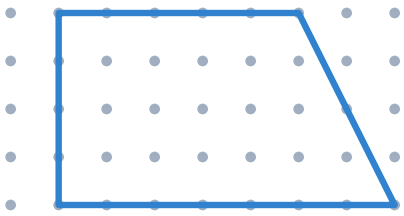

One way

Lesson 13.7 · Draw quadrilaterals

8. Write the name of each polygon.

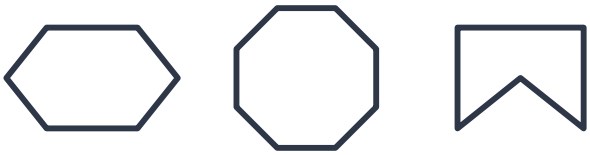

hexagon octagon pentagon

Lesson 13.8 · Polygons

9. Circle the name of each figure.

line **ray** line segment

parallel **perpendicular**

acute right **obtuse**

Lesson 13.9 · Lines, rays and angles

10. Draw every line of symmetry. Write how many lines.

2 1 0

Lesson 13.10 · Lines of symmetry

11. How many unit cubes make the solid? Circle its name.

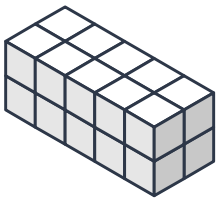

cube

rectangular prism

triangular prism

20 unit cubes

Lesson 13.11 · Solids and unit cubes

© 2026 Eggroll Games

Shapes and Perimeter

Unit Test, Form B (page 1 of 2)

Score _____ / 11

1. Find the perimeter.

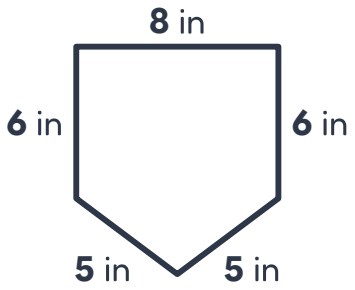

Perimeter = 30 in

Lesson 13.1 · Perimeter

2. Find the missing side.

Perimeter = 30 ft

Lesson 13.2 · Find a missing side

3. Find the perimeter in units and the area in square units of each rectangle. Circle the rectangle with the greater area.

A

Perimeter 18

Area 14

B

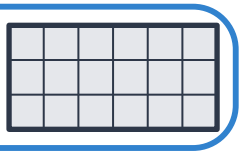

Perimeter 18

Area 18

Lesson 13.3 · Same perimeter, other area

4. Circle area or perimeter. Then solve.

Carpet covers a floor 6 feet long and 4 feet wide. How much carpet is there?

(area) perimeter

Answer: 24 square feet

Lesson 13.4 · Area or perimeter?

5. Look at the quadrilateral. Write how many.

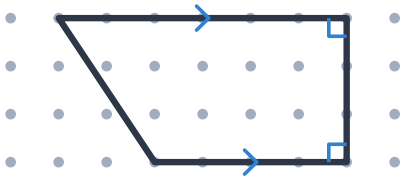

2 right angles

1 pairs of parallel sides

Lesson 13.5 · Quadrilateral attributes

© 2026 Eggroll Games

Shapes and Perimeter

Unit Test, Form B (page 2 of 2)

6. Circle every rhombus. Marks show equal sides and right angles.

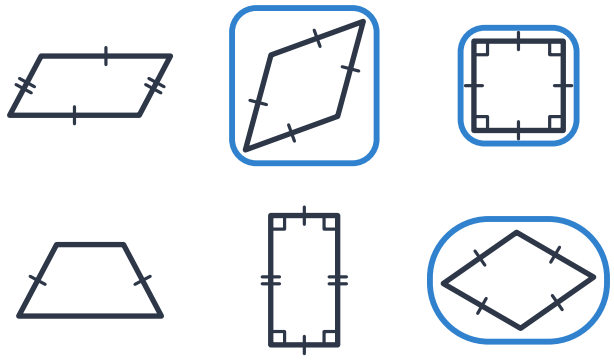

Lesson 13.6 · Rhombus, rectangle, square

7. Draw a quadrilateral that is not a rhombus, a rectangle or a square.

Give it **4** sides of different lengths.

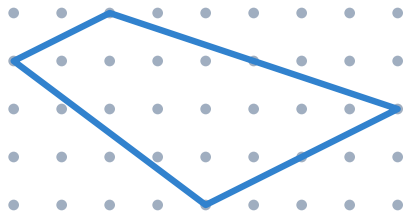

One way

Lesson 13.7 · Draw quadrilaterals

8. Write the name of each polygon.

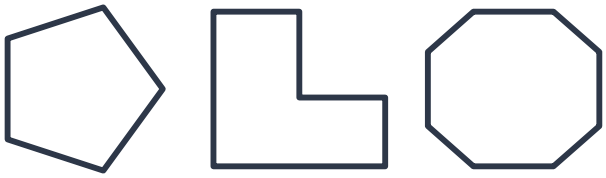

pentagon hexagon octagon

Lesson 13.8 · Polygons

9. Circle the name of each figure.

line ray **line segment**

parallel perpendicular

acute right obtuse

Lesson 13.9 · Lines, rays and angles

10. Draw every line of symmetry. Write how many lines.

2 1 0

Lesson 13.10 · Lines of symmetry

11. How many unit cubes make the solid? Circle its name.

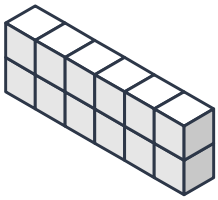

cube

rectangular prism

triangular prism

12 unit cubes

Lesson 13.11 · Solids and unit cubes

© 2026 Eggroll Games